Testing Guide: Heater Controller Board

Equipment required for the testing procedure:

- Oscilloscope
- 2 x DC-Power supply min. 12V/200mA
- DC-Power supply min. 60V/5A
- Function generator
- Banana cables
- Crocodile-clamp-cables
- The PCB-board
- Two surface-mount OPA548 with 8-connector plugs
- Digital trimmer with 3-connector plug
- Heat sink with fan
- High power (at least ~50W) 10-25 Ohm resistor (consider using a heat-sinked resistor)
- Voltmeter

Low voltage test

- Connect the oscilloscope ground, the two negative poles of the 12V power supplies and the function generator to a common ground and a grounded table. Place the PCB-board on an insulated surface (paper or plastic) on that table.
- Connect the digital trimmer and the two OPA548.
- Before connecting set a one of the power supplies to 12V and limit the output current to ~200mA
- Make sure all power supplies are turned off / the outputs are disabled.
- Connect the ground to the negative pole "-" at the "12 Volt supply" plug on the board.
- Note that it is not necessary to connect all the ground connectors on the board as they are all connected.
- Connect the turned off power supply, which has been set to 12V/200mA to the "+" at the "12 Volt supply" plug.
- Connect the positive output of the function generator to the oscilloscope (channel 1).
- Turn the function generator on and look at the signal. It should be sinusoidal. Set the offset of the function generator such that the signal only takes positive values. The amplitude should be 5V. The frequency is not important. Between 50Hz and 1kHz should work.
- Turn the function generator off and in addition to connecting it with the oscilloscope, connect the positive output to the "+" at "Control Voltage 0→10".
- Connect the "+" of the "Analog Out" connector to channel 2 at the oscilloscope.
- Turn the 12V power supply on and check the current output (it should be between 0mA and 20mA) if not turn the output off immediately, you may have a bad connection/short circuit.

- Turn on the frequency generator and observe both signals on the oscilloscope. Set the oscilloscope to x-y mode. You should observe a line with a positive slope.
- Correct any offset with the "offset" potentiometer (it is very fine).
- Check that the trimmer potentiometer works as intended. The "Analog Out" is designed such that 1V corresponds to 1A. When R23 is 5k (max current is 10A) this would mean that when the trimmer is set to 25 the line should flatten out above 2.5V. When R23 is 110k (max current is 5A) and the trimmer is set to 25 the line should flatten out at 5/4 V.

High voltage test:

- Connect the heat sink fan for the OPA548's to the 12V power supply.
- Connect the heat sink fan for the load resistor to the 12V power supply.
- Connect ground (should be direct path to the 60V power supply's negative pole) to the "-" connector at the "60V supply" connector on the board.
- Connect the resistor on one side to the "+" at the "Output" and the other side as directly as possible to the 60V power supply's negative pole.
- Set the 60V power supply to 30V/1A and turn it off.
- Connect the power supply's positive pole to the "+" at the "60V supply" connector.
- Connect channel 2 of the oscilloscope to the "Output"-plug "+".
- Change the scale for channel 2 on the oscilloscope to maximum (e.g. 10V/division).
- All the fans should be running.
- Turn on the 60V power supply.
- You should observe a positive slope on the oscilloscope.
- Check the offset and set the desired slope with the "Amp/Volt" trimmer. I would suggest 0.5 Amp/Volt. (Calculate the current from the resistance of the load resistor via: Current=Voltage/Load Resistance)
- Turn the power off and unplug one of the OPA548 chips.
- Turn the power back on. The output current (the voltage across the load resistor) should be ½ of the previous value now.
- Also check the voltage across R11 and R15. They should be the same. This means that each of the OPA548 supplies the same current.

Overheating test:

- Turn off the 60 V power supply
- Reconnect the OPA548.
- Turn the 60 V power supply on.
- Measure the voltage across the "Thermal status" connector on the board. Under normal operation it should be ~0V.
- Turn off the 60 V power supply and un-mount one OPA548 from the heat sink
- Turn the 60 V power supply on.
- Check if the chip is getting warm. (careful! The chip can get very hot!)
- Check when the output current collapses to only the output of the heat-sinked OPA548. The voltage across the thermal status should be 4V once the chip shuts down. Be careful not to use the chip for too long when it is not heat-sinked as this could damage the chip.
- Put the chip back on the heat sink.
- Increase the output of the power supply to 50V/5A.

- Disable the 60V supply.
- Disconnect the function generator from the control voltage.
- The constant DC voltage of the second 12V power supply will now serve as the control voltage. Set the voltage of the second 12V power supply to a value that corresponds to an output voltage (across the load resistor) of 25V. For a 25 Ohm resistor and 0.5A/V it would be 2V.
- Connect the second power supply to the "Control Voltage" "+" connector.
- Turn the 60V power supply on again. Make sure that the limit set with the digital trimmer allows for at least 1A to pass through. In this configuration the stress on the OPA548 chips is at a maximum. Let it run for a while –checking the temperature of the chips and the heat sink in regular intervals- . The power dissipated at the chips is 1A*25V=25W.
- Double the control voltage (e.g. to 4V). The current supplied is now 2A in this example. I would suggest using a load resistor with an even smaller resistance. 10 Ohm for example – here you can go to the maximum of 5A @ 50V. However this either needs to be heat sinked extremely well (as ~250W will be dissipated a the load resistor) or the current is active only for a small time.
- Do any of the resistors or vias heat up significantly (so that they cannot be touched anymore)?

Troubleshooting:

- In case of any weird behaviour try running only with one OPA548 in either of the two sockets. Thus eliminating the possibility of either the chips or the peripheral components of the OPA548 being defective.
- There is an offset in the line that can't be compensated with the "offset" trimmer. The resistors; at the operational amplifier, generating the output might be too low. For example 4x10kOhm and not 4x1MOhm.
- Check all resistors and chips for bad connections. Measure voltages etc.

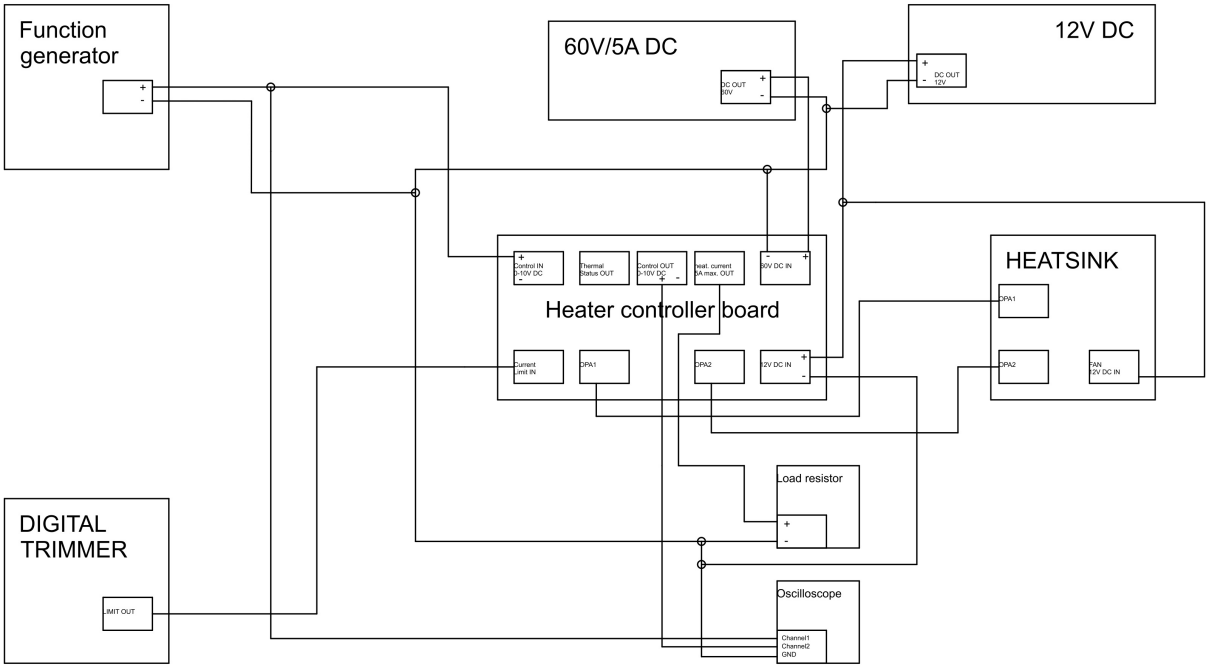
Function generator
+
-
60V/5A DC
DC OUT 60V
+
-
12V DC
+
-
DC OUT 12V
Heater controller board
+
Control IN 0-10V DC
-
Thermal Status OUT
Control OUT 0-10V DC
+
-
heat. current 5A max. OUT
-
+
60V DC IN
Current Limit IN
OPA1
OPA2
12V DC IN
+
-
HEATSINK
OPA1
OPA2
FAN 12V DC IN
Load resistor
+
-
DIGITAL TRIMMER
LIMIT OUT
Oscilloscope
Channel1
Channel2
GND